Kingston Safety & Relief Valves

Kingston Model 112CSSEN

ASME Code Safety Valve
Electroless Nickel Plated

Features:

- Precision Machined Hard Seat
- Electroless Nickel Plated Brass Construction
- Stainless Steel Ball & Spring
- Pull Ring for Manual Testing
- Three Sizes: 1/4 NPT, 3/8 NPT & 1/2 NPT
- ASME Certified - Stamped UV + NB
- Registered in All Canadian Provinces & Territories
- Maximum Temperature 400°F
- Set Pressure Range 25-300 PSIG
- Every Safety Valve Factory Set and Tested

Model	Available Sizes	Orifice	Figure/Part No	Dimensions (inches) Height (A)	Hex (B)	Set Pressure Range PSIG	Approximate Ship Weight	Max Temp
112CSSEN	1/4 NPT	.250	112CSSEN-2-000	3 1/8	3/4	25-300	4 oz	400°F
	3/8 NPT	.250	112CSSEN-3-000	3 1/8	3/4		4 oz.	
	1/2 NPT	.375	112CSSEN-4-000	3 3/4	7/8		7 oz.	

Materials

No.	Part Name	Materials
1	Body	Electroless Nickel Plated Brass
3	Stem Assembly	EN Brass Stem, Stainless Steel Ball
4	Spring	Stainless Steel
5	Adjusting Screw	Electroless Nickel Plated Brass
6	Lock Nut	Electroless Nickel Plated Brass
7	Cap	Electroless Nickel Plated Brass
8	Pull Ring	Stainless Steel
9	Seal	Vinyl

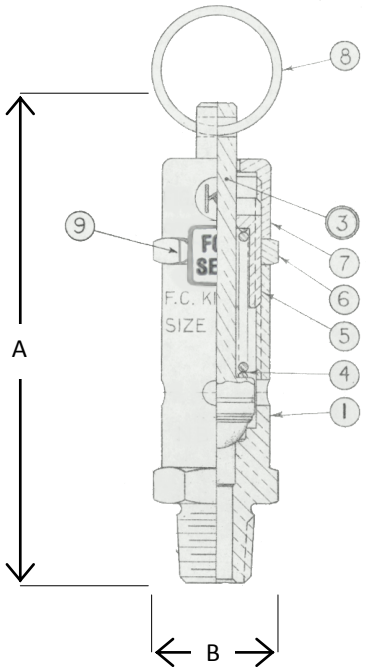

www.KingstonValves.com
KINGSTON
Storm Manufacturing Group
23201 Normandie Ave., Torrance CA 90501-5050
Toll Free: 866-628-8287 Fax: 800-997-0500 Direct: 310-326-8287

Copyright 2010 © Storm Manufacturing Group. All rights reserved. Product designs and specifications subject to change without notice. r.10b

Kingston Model 112CSSEN Safety Relief Valve

Flow Capacity Information

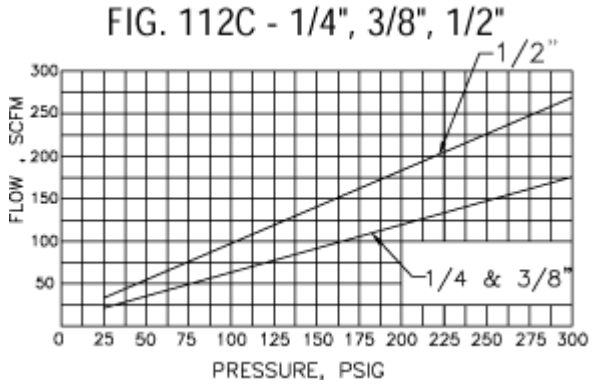

SET PRESSURE	STAMPED CFM		SET PRESSURE	STAMPED CFM	
	1/4, 3/8	1/2		1/4, 3/8	1/2
25	21.5	33	165	100	153
30	24	37	170	103	157
35	27	41	175	106	162
40	30	46	180	108	166
45	33	50	185	111	170
50	36	54	190	114	174
55	38	59	195	117	179
60	41	63	200	120	183
65	44	67	205	123	187
70	47	72	210	125	192
75	50	76	215	128	196
80	52	80	220	131	200
85	55	84	225	134	205
90	58	89	230	137	209
95	61	93	235	139	213
100	64	97	240	142	217
105	66	102	245	145	222
110	69	106	250	148	226
115	72	110	255	151	230
120	75	114	260	153	235
125	78	119	265	156	239
130	80	123	270	159	243
135	83	127	275	162	247
140	86	132	280	165	252
145	89	136	285	167	256
150	92	140	290	170	260
155	94	144	295	173	265
160	97	148	300	176	269

Ordering Information

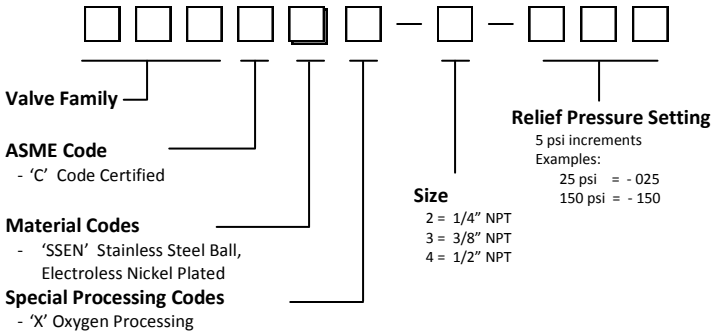

Product Notes

All Kingston Safety Valves are manufactured under a quality control system accepted by the National Board of Boiler and Pressure Vessel Inspectors.

Code valves are capacity certified by the National Board, manufactured in accordance with ASME Code, set and sealed at the factory.

Set pressure can deviate from the marked by ± 2 psig at or below 70 psig set pressures and ± 3% psig above 70 psig.

Factory standard seat tightness for hard seat valves: no audible leakage at 20% below nameplate set. It is normal for spring-operated safety valves to exhibit leakage or simmer/warn, as the system operating pressure approaches the set pressure. For hard seat valves this typically occurs at pressures at or above 80% of nameplate set pressure.

At very low set pressures (20 psi and below), the ratio of the downward spring force as compared to the upward pressure force is very small. In these cases it may be impossible to achieve seat tightness.

Soft seat valves will typically provide a higher degree of seat tightness than metal, hard seats. Factory standard seat tightness does not ensure bubble-tight seal regardless of material.

Final application design and integration of Kingston Products are the sole responsibility of the end user.

Storm Manufacturing reserves all rights. Product specifications and designs are subject to change without notice.

www.KingstonValves.com
KINGSTON
Est. 1908
Storm Manufacturing Group
23201 Normandie Ave., Torrance CA 90501-5050
Toll Free: 866-628-8287 Fax: 800-997-0500 Direct: 310-326-8287

Copyright 2010 © Storm Manufacturing Group. All rights reserved. Product designs and specifications subject to change without notice. r.10b